READ THIS ENTIRE GUIDE CAREFULLY BEFORE INSTALLING NOBELIA™ SIDING.

This installation guide applies to all NOBELIA siding profiles, including SPF tongue-and-groove and exposed nail siding.

IMPORTANT:

FAILURE TO COMPLY WITH THE INSTALLATION AND STORAGE REQUIREMENTS OF NOBELIA WOOD SIDINGS AS WELL AS THE APPLICABLE BUILDING CODES IN YOUR REGION WILL VOID THE WARRANTY.

Before installing your siding, carefully check your order to make sure you have received the right products. If you notice any anomalies or have any doubts about their compliance, DO NOT INSTALL and contact your representative immediately. The Goodfellow warranty is limited to the replacement of defective products that have not yet been installed.

See section 4 for specific requirements regarding the installation of siding with exposed nails in coastal regions (located within 3,000 feet or 915 metres from the coastline).

NOBELIA stained wood sidings are for exterior use only.

1. STORING THE PRODUCT

- Keep the siding in a dry and ventilated area. It should not come in direct contact with the ground and be stored at least 6" above the ground.
- At the end of the work day, cover any unused siding in its original packaging to prevent damage caused by rain, snow, humidity and sun.

2. BEFORE YOU BEGIN INSTALLATION

- Be sure to have the appropriate nails, staples and touch-up paint on hand.
- The installed siding must not come in direct contact with the ground, masonry, insulation or horizontal structures. Ensure a minimum clearance of 8" from the ground [FIGURE 1], 3/4" from insulation or masonry, and 2" from horizontal structures.
- Install ventilated strip with a minimum 50% opening or screening at the base of the wall to allow for drainage and uninterrupted ventilation behind the siding, and to prevent insect or rodent infestation. The ventilated strip is designed for horizontal installation and should continue around the entire building.
- Exterior sidings do not form a waterproof barrier; be sure to install a weather-resistive barrier such as TYPAR first to protect your home from water infiltration.
- Installing gutters or mouldings to deflect water away from the siding will help to prevent premature aging of the finish.

FIGURE 1

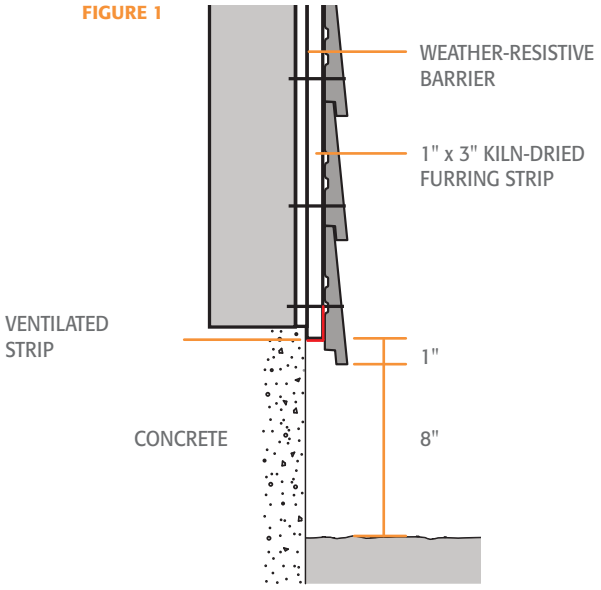

3. INSTALLING THE FURRING STRIPS

- Remove any materials that can block air ventilation and water drainage. This includes horizontal furring strips at the bottom of walls and around doors and windows.
- Always leave a minimum 1/2" opening at the top and bottom of walls to ensure adequate air flow behind the siding across the entire span of the wall. [FIGURE 2]

FIGURE 2

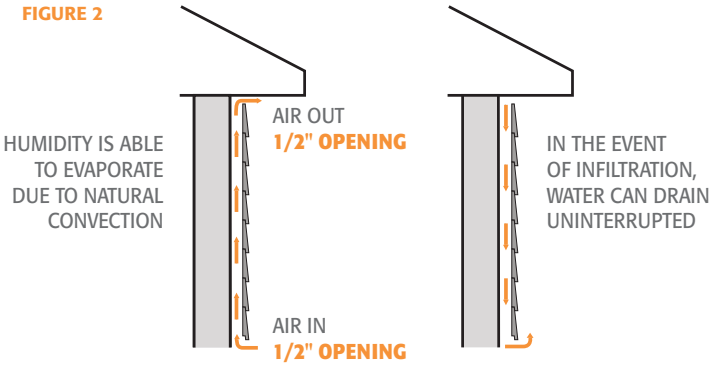

VERTICAL FURRING STRIPS (for installing siding horizontally)

- Use 1" x 3" kiln-dried furring strips. Nails must have a minimum penetration of 1 1/4" in the structure.
- Maximum spacing of 16" centre to centre (c/c) between furring strips for a horizontal siding installation. [FIGURE 3]
- Nail furring strips every 12". [FIGURE 3]

DOUBLE FURRING (for installing siding vertically)

- Start with the vertical furring.
- Then install horizontal furring strips over the vertical furring strips every 12". [FIGURE 4]
- **Double furring is mandatory in Quebec**. It ensures optimum product performance by allowing for continuous air ventilation and water drainage behind the siding. Double furring is recommended in Ontario.

FIGURE 3

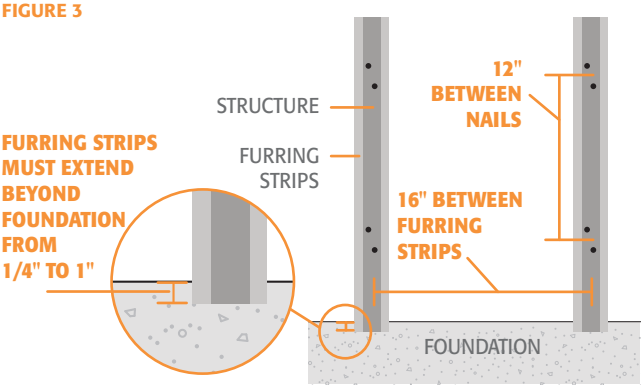

FIGURE 4

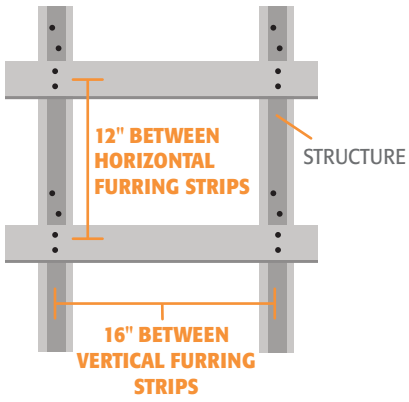

HORIZONTAL-ONLY FURRING

Horizontal-only furring is permitted in Ontario provided that:

- Furring is installed every 12". [FIGURE 5]
- A 1" space is left between the ends of furring strips or at every 8' to allow for adequate water drainage.
- There is a real 1" nailing base obtained either by combining furring and OSB or plywood, or by using real 1" or 2" x 3" furring.

Goodfellow strongly recommends double furring when installing siding vertically over a foam insulation panels or ICF, or when siding is dark in colour. Double furring makes it easier for heat or moisture accumulated behind the siding to evacuate and will ensure optimal performance of the product.

FIGURE 5

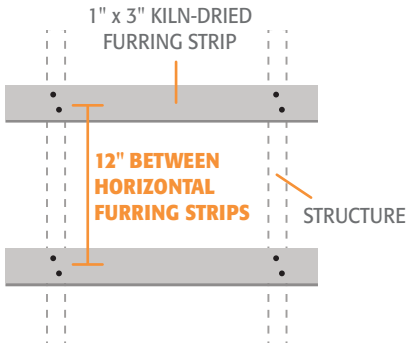

IMPORTANT : FAILURE TO COMPLY WITH THE INSTALLATION AND STORAGE REQUIREMENTS OF NOBELIA WOOD SIDINGS AS WELL AS THE APPLICABLE BUILDING CODES IN YOUR REGION WILL VOID THE WARRANTY.

4. FASTENING THE SIDING (NAILS AND STAPLES)

Fastening depends on the type of siding.	TYPE	
FASTENER	SPF WOOD WITH EXPOSED NAILS	SPF WOOD WITH TONGUE-AND-GROOVE
Stained Goodfellow hot-dipped galvanized steel nails + hammer cap	•	For cuts
Unstained stainless steel grade 316 nails + hammer cap	Coastal areas	Coastal areas
Unstained hot-dipped galvanized steel coil nails	•	
7/16" x 2" 16 gauge, 304 stainless steel staples		•
7/16" x 2" 16 gauge, 316 stainless steel staples		Coastal areas

SPF SIDING WITH EXPOSED NAILS

- Use Goodfellow hot-dipped galvanized steel nails stained in the same colour as the siding. In coastal areas, unstained stainless steel grade 316 nails must be used.
- Coil nails: Respect the minimum depth of drive. Finish as needed with a hammer fitted with a cap.
- Nails must not sink into or protrude from the wood, but sit flush on the surface. [FIGURE 6]
- For manual installation, use a hammer fitted with a cap to prevent damaging the nail heads and the surrounding wood.
- Touch up damaged nail heads with touch-up paint. [FIGURE 11]
- Nails must have a minimum real penetration of 1" into solid wood.
- Nail every 16" c/c.

FIGURE 6

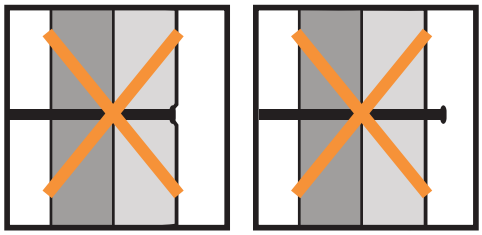

NAIL SUNK TOO DEEPLY

NAIL NOT SUNK ENOUGH

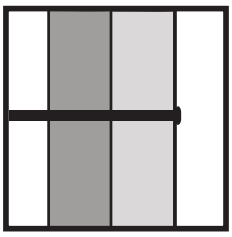

NAIL PROPERLY SUNK

TONGUE & GROOVE SIDING

- Only use siding staples to install NOBELIA tongue & groove siding. Use 2" length, 7/16" crown, 16 gauge, stainless steel SUS 304 staples or larger.
- For consistent stapling, use the NOBELIA stapler guide. It ensures staples are correctly angled and positioned along the stapling line and makes it easier to maintain the recommended 3/4" spacing between staples. [FIGURE 7]

FIGURE 7

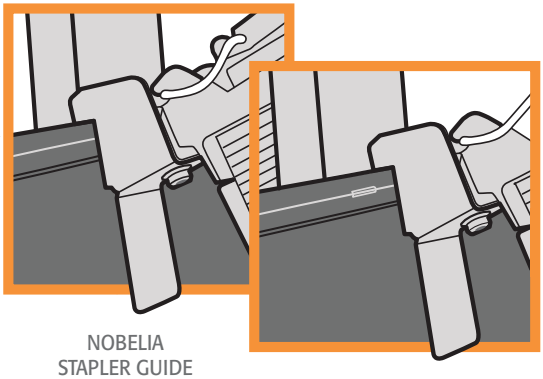

NOBELIA
STAPLER GUIDE

IMPORTANT : FAILURE TO COMPLY WITH THE INSTALLATION AND STORAGE REQUIREMENTS OF NOBELIA WOOD SIDINGS AS WELL AS THE APPLICABLE BUILDING CODES IN YOUR REGION WILL VOID THE WARRANTY.

Tongue & Groove Siding (cont'd)

- Install two staples centred on each furring strip. Staples must be positioned directly on the stapling line at a 30° to 40° angle. [FIGURES 8, 9]
- Never install staples less than 3/4" from the edge of boards. If a staple cannot be used, the siding must be fastened with a nail.
- The staple head must sit flush on the surface and not sink into the wood, which can damage the board. Always use a pneumatic stapler with an adjustable depth of drive. [FIGURE 9]
- Ensure staples have a minimum real penetration of 1" in solid wood. When stapling, press the board firmly against the furring strip.
- If you have to cut a board, use nails and touch-up any bare wood to seal it. See SPF siding with exposed nails.

FIGURE 8
2 STAPLES PER FURRING STRIP

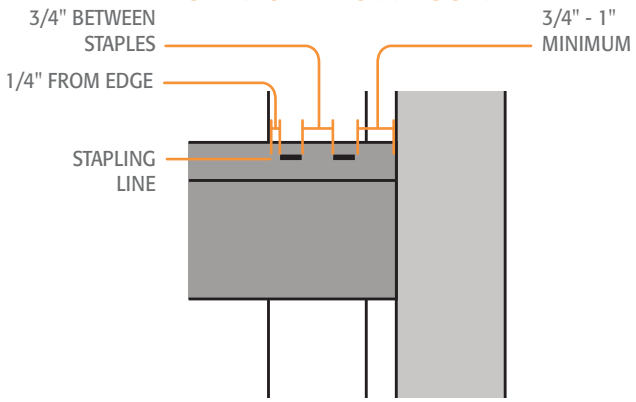

FIGURE 9
ANGLE AND PENETRATION

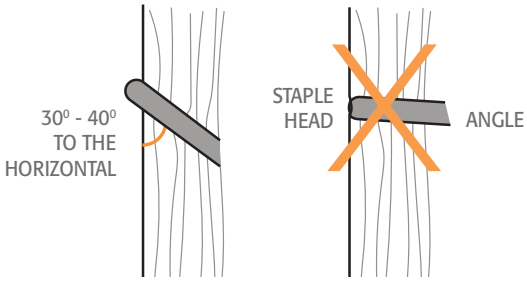

MOULDINGS

- For a flawless finish, use NOBELIA mouldings in coordinating colours.
- Joints must be cut at a 22.5° angle and touched up with touch-up paint.
- Mouldings require surface nailing; nails must have a minimum real penetration of 1" into solid wood.
- Never make corners by joining two pieces of siding cut at a 45° angle. Over time, the gap between the boards will widen and become unsightly.

FIGURE 10
NAILING MOULDINGS

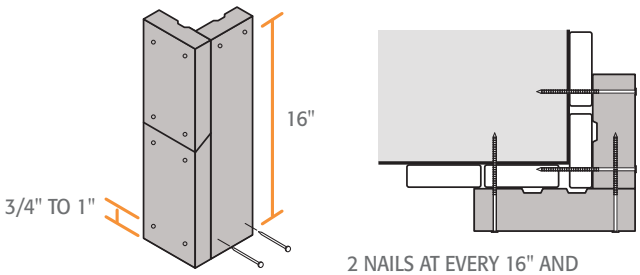

5. TOUCH-UPS

Cut wood must be resealed as it may deteriorate if left unprotected. Carefully apply a sufficient amount of touch-up paint only where needed, such as on cuts and damaged areas with exposed wood, even if it will not be visible once the siding has been installed. Touch up boards **BEFORE** you install them.

FIGURE 11

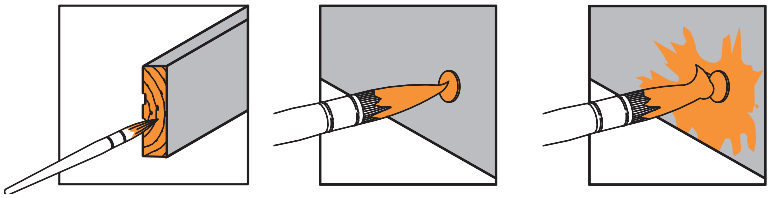

IMPORTANT : FAILURE TO COMPLY WITH THE INSTALLATION AND STORAGE REQUIREMENTS OF NOBELIA WOOD SIDINGS AS WELL AS THE APPLICABLE BUILDING CODES IN YOUR REGION WILL VOID THE WARRANTY.

6. INSTALLING SIDING HORIZONTALLY

SIDING WITH EXPOSED NAILS

- Install the first course of NOBELIA siding with exposed nails along with a ventilated strip with a minimum opening of 50% or screening. This will allow proper water and heat management while also preventing certain insects and rodents from getting in behind the siding.
- No spacing is necessary between boards.
- Alternate board lengths on the wall for a more attractive look.

NAIL POSITION

FIGURE 12
BEVEL 1" x 6"

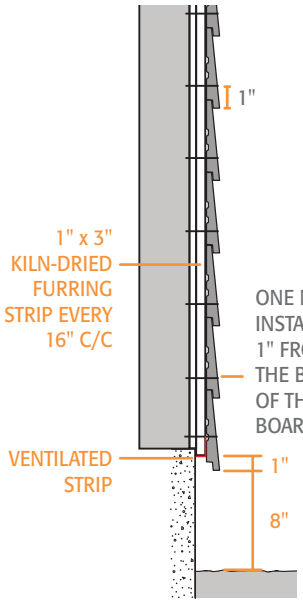

FIGURE 13
BEVEL 1" x 8"

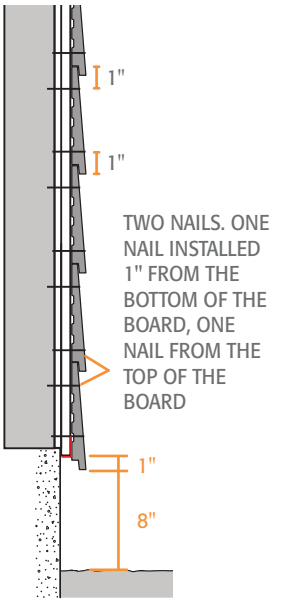

FIGURE 14
V-JOINT 1" x 6"
COVE 1" x 6"
CHANNEL 1" x 6"

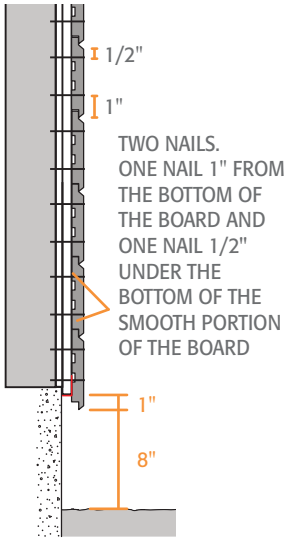

FIGURE 15
CHANNEL 1" x 8"

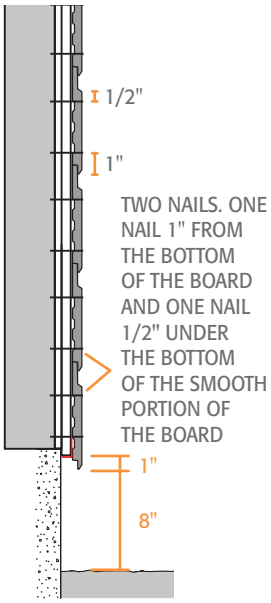

NOTE : NAILS MUST HAVE A MINIMUM REAL PENETRATION OF 1" INTO SOLID WOOD (FURRING STRIP + OSB OR FURRING STRIP + PLYWOOD WOOD)

JOINTS

- Joints must be cut at a 22.5° angle, then touched-up with touch-up paint and fastened to a furring strip.
- Use two nails for 22.5° joints.

FIGURE 16

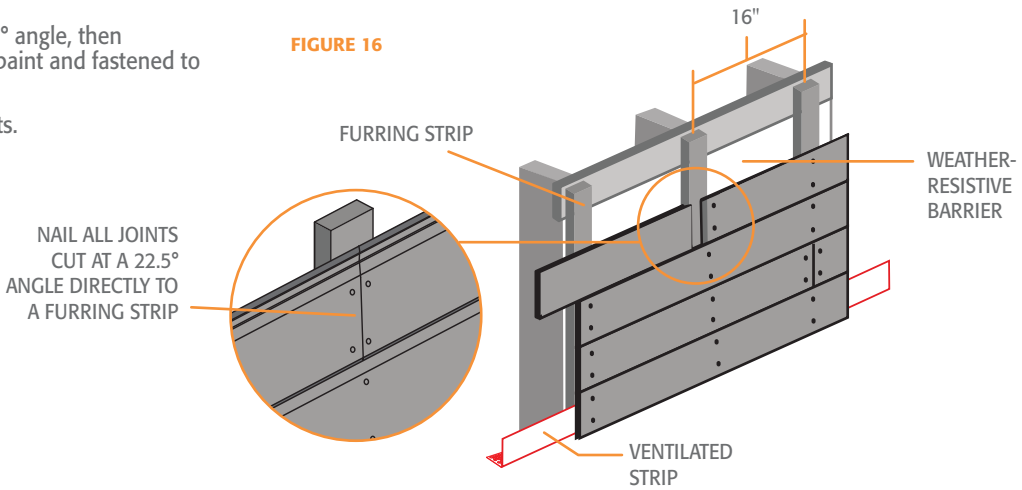

IMPORTANT : FAILURE TO COMPLY WITH THE INSTALLATION AND STORAGE REQUIREMENTS OF NOBELIA WOOD SIDINGS AS WELL AS THE APPLICABLE BUILDING CODES IN YOUR REGION WILL VOID THE WARRANTY.

TONGUE & GROOVE SIDING

- Install the first course of NOBELIA tongue & groove siding with a ventilated strip or screening. The first course of siding must be nailed. [FIGURE 17]
- During installing, fit boards together tightly lengthwise.

Tongue & groove siding requires very few cuts. If you have to make a cut, use touch-up paint. See Section 5.

FIGURE 17

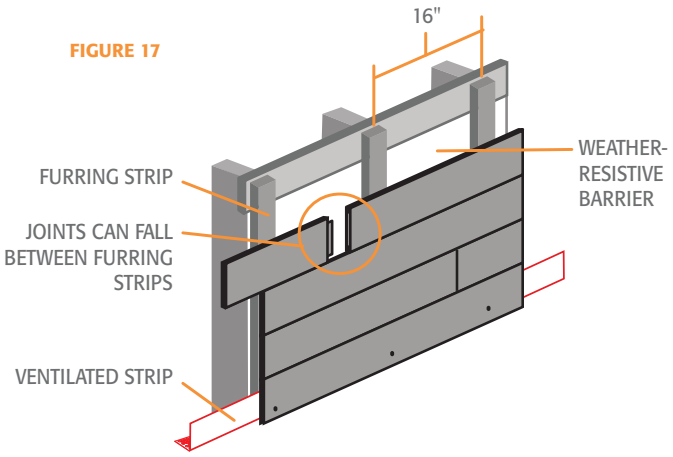

7. INSTALLING SIDING VERTICALLY (V-JOINT, CHANNEL AND BOARD & BATTEN)

SIDING WITH EXPOSED NAILS

- Install double furring. See Section 3.
- Ensure the angle cut points downward.

V-JOINT 1" X 6" , CHANNEL 1" X 6" CHANNEL 1" X 8"

FIGURE 18

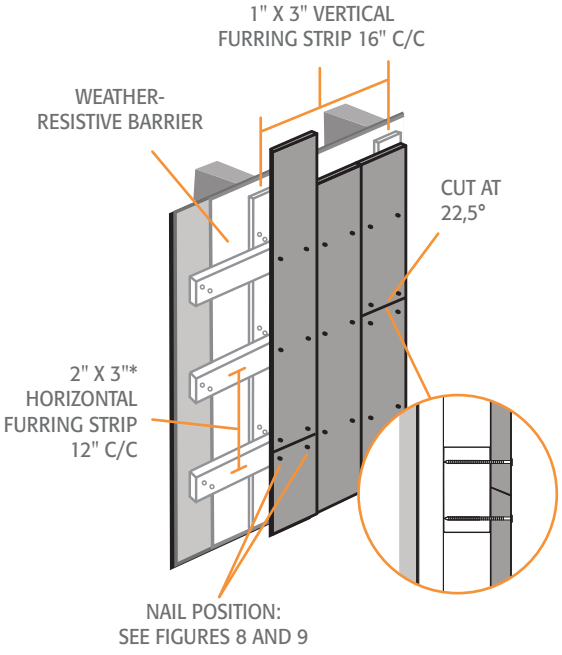

BOARD & BATTEN

FIGURE 19

Fasten boards every 12" vertically, 3/4" from the edges. Leave a 1/4" gap between each board. Nail battens in the centre.

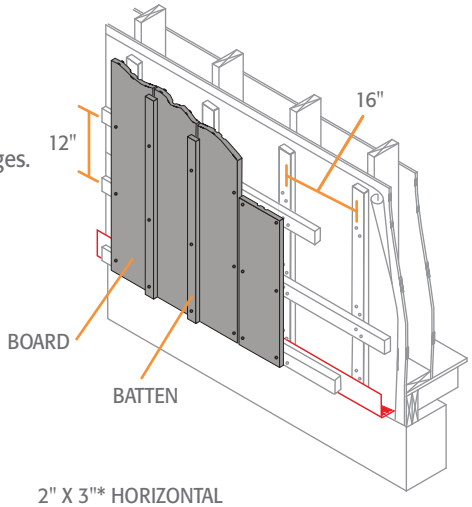

FIGURE 20

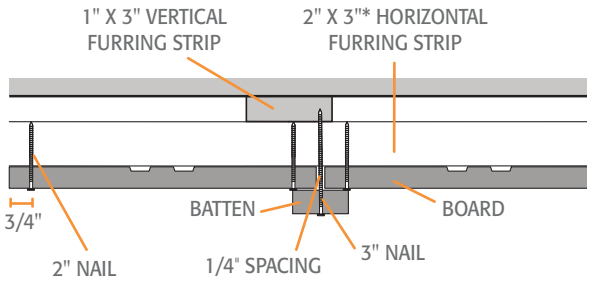

* 1" X 3" HORIZONTAL FURRING STRIPS ARE ACCEPTABLE; HOWEVER, GOODFELLOW RECOMMENDS USING 2" X 3" OR FULL 1" FURRING STRIPS TO ENSURE OPTIMAL PERFORMANCE OF THE PRODUCT.

IMPORTANT : FAILURE TO COMPLY WITH THE INSTALLATION AND STORAGE REQUIREMENTS OF NOBELIA WOOD SIDINGS AS WELL AS THE APPLICABLE BUILDING CODES IN YOUR REGION WILL VOID THE WARRANTY.

TONGUE & GROOVE SIDING

- Staples may be more visible when tongue & groove siding is installed vertically.
- Install double furring. See section 3.
- When installing siding vertically, always start on the right side of the wall. Fasten the first board with nails.
- To prevent water from infiltrating the joints between boards, install siding with the tongue end facing up.

FIGURE 21
V-JOINT 1" X 6"
CHANNEL 1" X 6"

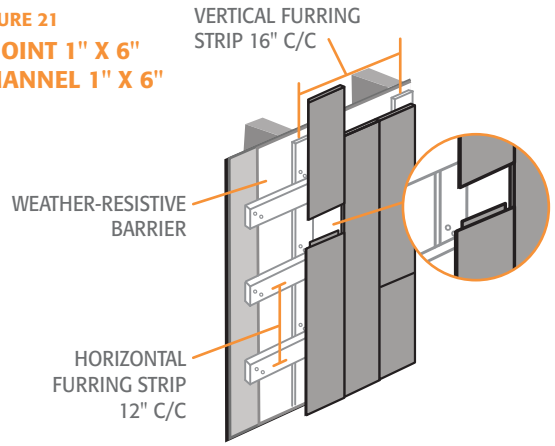

8. JUNCTIONS

SIDING-DECK

Siding must never come into direct contact with a balcony or deck.

- 2" space between adjacent horizontal structures
- 1/2" space between the siding and the flashing to allow proper drainage and air flow to ventilate the wall.

FIGURE 22

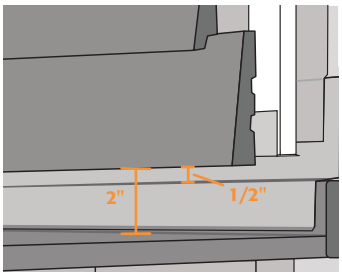

DORMER-ROOF

Siding should never come in direct contact with the roof. It must have a minimum vertical clearance of 2" with the roof surface.

FIGURE 23

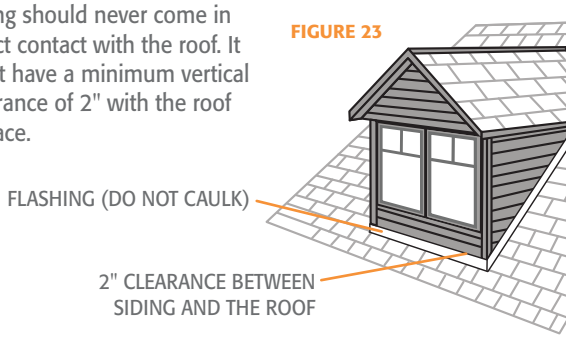

SIDING-OTHER TYPES OF SIDING

Where two types of siding meet (such as siding and stone, or siding and brick, etc.), install flashing (minimum 6% slope) and leave a 1/2" space above the flashing to allow for drainage and adequate ventilation. NEVER CAULK.

FIGURE 24

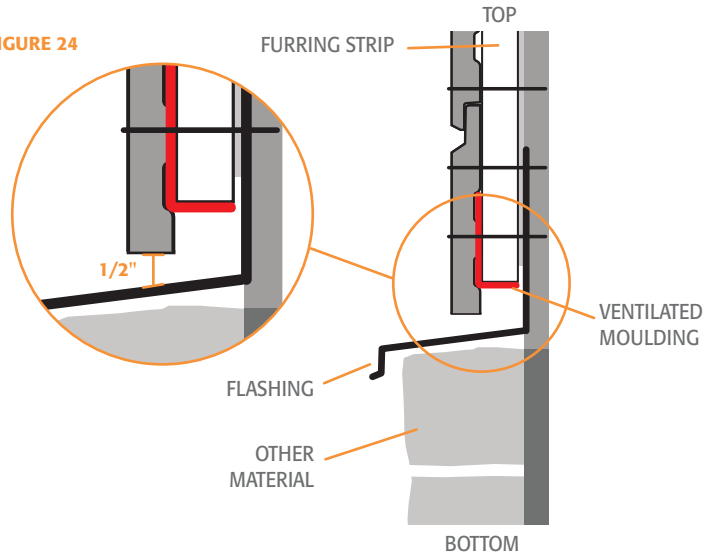

IMPORTANT : FAILURE TO COMPLY WITH THE INSTALLATION AND STORAGE REQUIREMENTS OF NOBELIA WOOD SIDINGS AS WELL AS THE APPLICABLE BUILDING CODES IN YOUR REGION WILL VOID THE WARRANTY.

9. TOP AND BOTTOM OF WINDOWS

TOP OF WINDOW

- Leave a minimum 1/2" spacing between flashing and the siding to allow for adequate drainage and airflow.
- Apply caulking along the sides of windows, doors and mouldings to prevent water and insect infiltration. Always touch-up cut boards before installing them.
- Boards installed under windows and the bottom of boards installed above windows and doors must always be fastened with nails, not staples. [FIGURE 20]

FIGURE 25

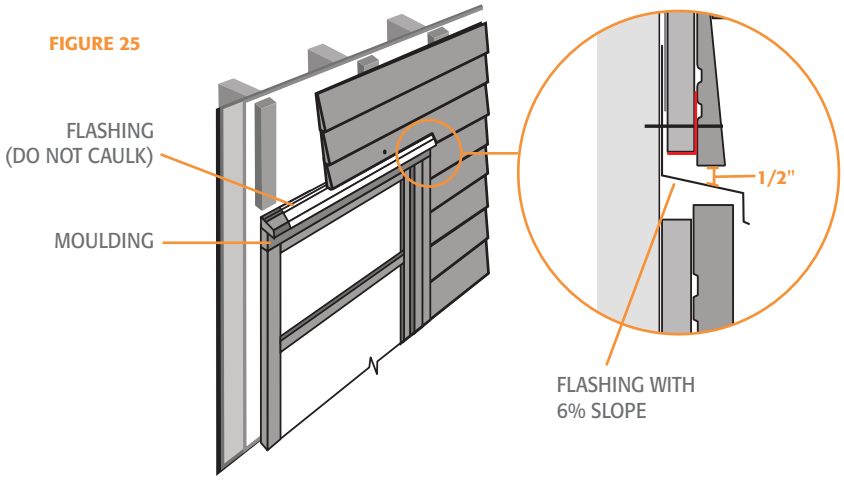

BOTTOM OF WINDOW

Ventilation at the bottom of windows is required when the window has a width of more than 4 ft and is located more than 4 ft from the first course. Leave a 1/2" spacing between flashing and the siding.

FIGURE 26

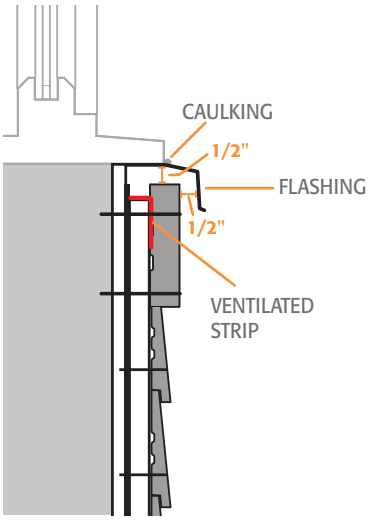

10. TOP OF WALL

It is important to allow air to circulate and for heat to escape at the top of walls. This is achieved by leaving a 1/2" space at the top of the wall and by using a ventilated strip with a minimum 50% opening, which will also prevent insects and rodents from getting in behind the siding.

FIGURE 27

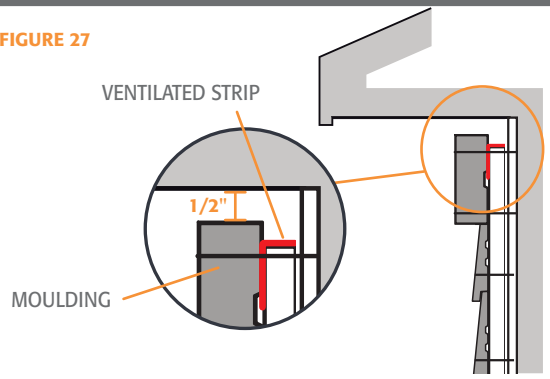

11. MAINTENANCE

NOBELIA stained wood sidings require minimal maintenance. To keep your original warranty coverage valid, always follow the recommendations in the Maintenance Guide. Consult the NOBELIA Maintenance Guide available at goodfellowinc.com.

For more details, visit goodfellowinc.com.

Montreal / Delson QC 1 800 361-6503
Quebec QC 1 800 463-4318
Ottawa ON 1 800 577-7842
Toronto / Campbellville ON 1 800 263-6269

IMPORTANT : FAILURE TO COMPLY WITH THE INSTALLATION AND STORAGE REQUIREMENTS OF NOBELIA WOOD SIDINGS AS WELL AS THE APPLICABLE BUILDING CODES IN YOUR REGION WILL VOID THE WARRANTY.

PRINTED IN CANADA – JULY 2017 NO1617003A